ipConvLite

Universal Communication Gateway

***ipConvLite* is an universal communication gateway for data transmission between different protocols. As a system for protocol conversion, it is suitable for coupling heterogeneous controllers, fieldbus devices, and telecontrol systems.**
In addition to pure protocol conversion, *ipConvLite* is suitable for extensive information processing due to its modular architecture.
The multitude of different communication interfaces of the hardware models complete the flexibility and expandability of the system.

- Security at the highest level (see Cyber Security)
- Communication between multiple data sources
- Simultaneous use of diverse protocols
- Intelligent information processing
- No programming required for configuration (see Configuration)
- Simple control unit connection
- Maintenance free operation
- Redundancy

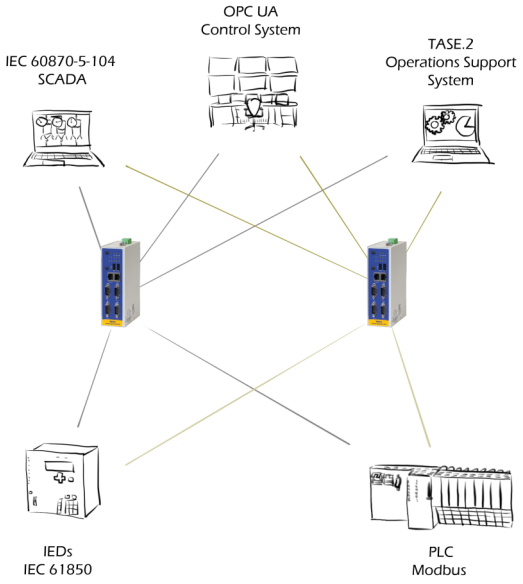

SUPPORTED PROTOCOLS

- OPC UA
- OPC DAXML
- IEC 60870-5-104
- IEC 60870-5-101
- IEC 60870-5-103
- DNP 3.0
- IEC 61850
- TASE.2 / ICCP
- ELCOM-90
- Modbus
- PROFIBUS
- PROFINET
- SNMP
- Simatic Fetch/Write
- REST
- MQTT Client
- Database Client
- Email Client
- GI74
- RP 570/571
- TG 80x
- SEAB 1/F
- Sinaut ST1
- Indactic 33/41, 2033

Further protocols on request!

FUNCTIONAL RANGE

- **Configuration**
  Configuration and maintenance of the system is conducted through the integrated web interface, which provides central access to all settings and services. Microsoft® Excel templates are provided to simplify data point configuration. In addition, the web interface enables the import of files and updates, such as
  - Firmware (application and operating system)
  - Excel configuration spreadsheet (signal table)
  - X.509 certificates
  - License files
- **Cyber Security**
  - Secure access to all administrative services (HTTPS, SSH, SFTP)
  - Role-based access protection with login and password
  - User administration for local users
  - Central user administration via Active Directory (LDAP) and/or RADIUS
  - Crypto Store for certificate management
  - Creation of self-signed certificates and Certificate Signing Requests (CSRs)
  - Import and export of certificates
  - Configuration of VPN tunnels (OpenVPN and IPsec)
  - Firewall
  - Safeguarded real-time Linux operating system
- **Data processing**
  - All data is broken down into individual information (single indications, measured values, counter values, etc.) and processed accordingly. A quality identifier and - if necessary - a time stamp is associated with each information item.
  - Namespace and data model can be changed as desired.
  - Powerful functions for data processing, such as type conversion, scaling, grouping, etc.
  - Data reduction / regulation of bandwidth, required on secondary side, via update intervals, threshold values, old/new comparison, collective messages, selection of data points, etc.

- **Network features**
  - Assigning multiple IP addresses to one physical Ethernet interface
  - Network management using an integrated SNMP agent
  - NTP based clock synchronization
  - HTTPS/SSH/SFTP access
  - DHCP
  - Bonding
  - PRP
  - VLAN

THE HARDWARE

ipConvLite is currently available with the following hardware models:

SEC3 is a compact controller with two serial RS232/RS4222/RS485 interfaces and two Ethernet adapters. Thanks to a redundant power supply different input voltages can be used.
The device is equipped with a status relay, which can be freely configured by the software. In the case of power failures or non-fulfillment of a user-defined condition a changeover switch falls into the idle state "FAIL".

The devices of the *MEC2* series are powerful mid-range embedded controllers that are designed for industrial use in a critical environment. Equipped with four serial RS232/RS422/RS485 interfaces and two Ethernet adapters by default, the *MEC2* can be extended with Mini PCI Express plug-in cards.

Maximum performance: Number of node variables that can be managed, processed, and transmitted.

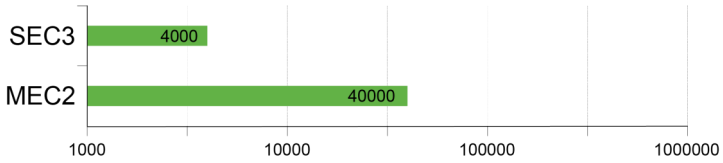

Maximum throughput: Information changes per second that can be transmitted in real time without data loss or buffering.

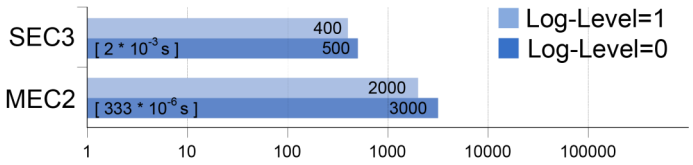

For detailed technical data on the *SEC3* and *MEC2* models, please visit **www.ipcomm.de**

IPCOMM GmbH

Walter-Bouhon-Straße 4
D-90427 Nuremberg

Phone: +49 911 180791-0
Fax: +49 911 180791-10

info@ipcomm.de
www.ipcomm.de

REDUNDANCY

To meet even increased security requirements, *ipConvLite* is fully capable of redundancy in combination with a second device.

- Line redundancy (hot-standby)
- Information redundancy
- Device redundancy (parallel operation)

With redundant protocol converters, reliability can be ensured, based on the "hot standby" principle. At any one time only one device assumes the active role, while the passive device monitors the active one and takes the initiative if it fails.
This minimizes downtimes due to maintenance work or component and interface outages, for example.

The redundancy coupling can be realized via Ethernet as well as over serial connections. If separate serial communication connections must be connected to both redundant devices, the CS channel switch will be applied.

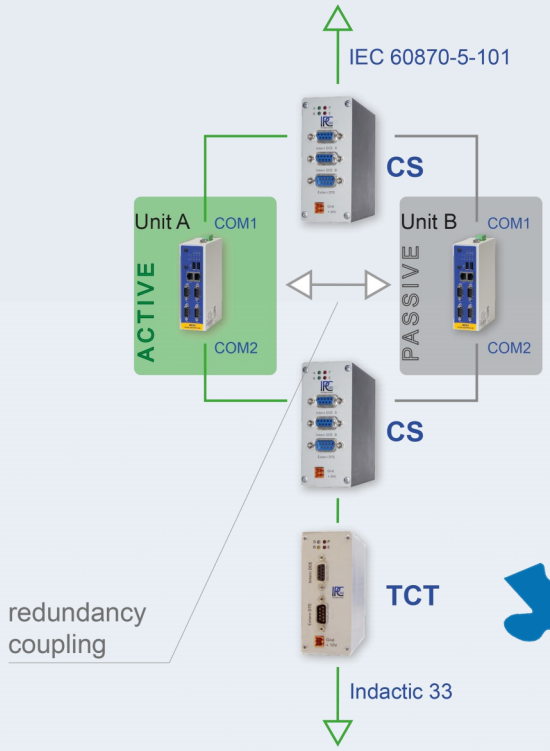

Example of a redundancy coupling based on serial connections.

Version 1.0-/10/18 | Subject to alterations